AGENDA
CITY OF HELOTES
PLANNING AND ZONING COMMISSION
October 6, 2020

The City of Helotes Planning and Zoning Commission will meet for a Regular Meeting on Tuesday, October 6, 2020 at 7:00 p.m. in the City Hall Council Chamber, 12951 Bandera Road, Helotes, Texas 78023. This is an open meeting, subject to the open meeting laws of the State of Texas.

SUPPLEMENTAL NOTICE OF PARTICIPATION BY TELEPHONE CONFERENCE

As a result of COVID-19, the Governor of Texas issued an order on March 16, 2020, suspending various provisions of the Open Meetings Act, which now authorizes the participation in a meeting by videoconference and / or teleconference. In order to advance the public health goal of physical distancing, the City of Helotes Planning and Zoning will conduct this regular meeting by telephone conference. No in person input will be allowed. To speak remotely, register in advance by using the fillable Citizen Comment Form on the City website. The comment form is due by 12:00 pm on Tuesday, October 6. Once the comment form is received, the speaker will receive a confirmation email with the toll-free phone number and access code. Speakers will be placed in a queue until their time to speak. Watch the livestream meeting broadcast on the City's YouTube channel. The digital meeting packet is available on the City website.

1. Call to order.

2. Roll call.

OPEN SESSION:

3. Citizens to be heard. ***The Planning and Zoning Commission may not discuss any presented issue, nor may any action be taken on any issue at this time (Attorney General Opinion JC-0169). The Commission will accept comments from citizens of the City of Helotes and its Extraterritorial Jurisdiction (ETJ) only. Comments are limited to three (3) minutes, and this time is not transferable. Each person may only speak once. No profanity or threats will be tolerated.***

ITEMS FOR INDIVIDUAL CONSIDERATION:

4. Discussion of and action on the minutes of the Regular Meeting of the Planning and Zoning Commission dated August 11, 2020. (Approval Item; Staff)

5. Discussion of and action on a request by PR Custom Signs for approval of a wall sign, pursuant to Municipal Code of Ordinances Chapter 98 *Zoning*, Section 98-72 *Old Town Helotes Special District*, Subparagraph (g)(6) (b)(2) *Commercial Signs – Projecting, Wall, Hanging, or In/On Windows* for Texas Property Group located at 14893 Bandera Road, Suite 5B, Helotes, Texas 78023, more particularly described as BCAD Prop. ID No. 242125. (Recommendation Item; Applicant)

6. Discussion of and action on a request by Southwest Texas Sign Service, Inc. for approval of signage for O'Reilly Auto Parts located at 13523 Bandera Road, Helotes, Texas, 78023, more particularly described as BCAD Prop. ID No. 1273575, and including the following:

   a. Secondary Wall Sign, pursuant to Municipal Code of Ordinances Chapter 66 *Signs,* Section 66-51 *Commercial Signs:* Subparagraph (b) *Wall Signs*; and

   b. Secondary Monument Sign, pursuant to Municipal Code of Ordinances Chapter 66 Signs, Section 66-49 *Commercial Signs: Single-Business Use Monument Type* (Recommendation Item; Applicant)

Adjourn.

NOTE: It is possible that a quorum of the City Council and/or other Municipal Advisory and Governmental Bodies may be in attendance at the above stated meeting. No action will be taken by the City Council and/or other Municipal Advisory and Governmental Bodies at the above stated meeting, other than the body specifically referred to in the above notice.

The Planning and Zoning Commission reserves the right to adjourn into Closed Session at any time during the course of this meeting to discuss any of the exceptions to the requirement that a meeting be open to the public, in accordance with Texas Government Code, Chapter 551 *Open Meetings*, Subchapter D *Exceptions to Requirement that Meetings be Open*. No action may be taken in Closed Session.

I certify that this Agenda was posted on October 1, 2020 at 12:00 p.m.

Celina Perez

Celina Perez, City Secretary

MINUTES
CITY OF HELOTES
PLANNING AND ZONING COMMISSION

The City of Helotes Planning and Zoning Commission met for a regular meeting on August 11, 2020 at 7:00 p.m. in City Hall Council Chambers, 12951 Bandera Road, Helotes Texas. This was an open meeting subject to the current open meeting laws of the State of Texas. Due to COVID-19, this meeting was conducted via teleconference. Physical distancing and the 10 people maximum were adhered to.

Commission Members

Present:	Gregg Michel, Chair (Via Teleconference) Jason Wightman, Vice Chair Ron Hozza, Secretary Joe Edmond (Via Teleconference) Richard Hawk (Via Teleconference) Mike McGlothing (Via Teleconference)
Absent:	Mario Rios Jeff Wade
Council Members/Staff Present:	Ernest Cruz, Development Services Director Marian Mendoza, City Administrator

DRAFT

1. Call to order.

Chair Michel called the meeting to order at 7:00 p.m.

2. Roll call.

Commissioner Hozza called roll. See above for members present.

OPEN SESSION:

3. Citizens to be heard.

No one signed up to speak on this item.

ITEMS FOR INDIVIDUAL CONSIDERATION:

4. Discussion of and action on the minutes of the Regular Meeting of the Planning and Zoning Commission dated July 7, 2020. (Approval Item; Staff)

Motion was made by Commissioner Hozza, second by Commissioner McGlothing, to approve the minutes.

Motion to approve carried unanimously.

5. Discussion of and action on a request by Cyntergy for approval of a variance to Municipal Code of Ordinances Chapter 66 *Signs*, Section 66-51 *Commercial Signs: Projecting, Wall and Hanging, or In or On Windows* for wall signage for Walmart Store #3057 located at 12550 Leslie Road, Helotes, Texas, 78023, more particularly described as BCAD Prop. ID No. 1175530. (Recommendation Item; Applicant)

The total allowable wall signage size for the Walmart building is 514 square feet. The current wall signage total for Walmart is 651.91 square feet, or 137.91 square feet over the allowable size. The said overage was granted through variances by City Council. The current wall signage includes the Walmart signs (613.41 s.f.), a Subway sign (16.5 s.f.), and a FedEx sign (22 s.f.). Walmart desires to install additional wall signage totaling 83.56 square feet. The proposed new signage is a Spark Logo & Pickup sign (64.53 s.f.) and an Auto Center with Arrow sign (19.03 s.f.). This would bring the overall wall signage total to 735.47 square feet, or 221.47 square feet over the allowable size. Walmart seeks a variance on the new overage amount.

Motion was made by Commissioner McGlothing to recommend approval of the variance with the suggestion that City Council consider a Master Sign Plan to help manage future signage in a way that serves Walmart, but also adheres to City code. The motion was seconded by Commissioner Hawk.

Motion to recommend approval carried unanimously.

Adjourn.

With no more business to come before the Commission, Chairman Michel adjourned the meeting at 7:32 pm.

Respectfully submitted,

_____

ATTEST: Gregg Michel, Chair

_____

Celina Perez, City Secretary

DRAFT

PLANNING & ZONING COMMISSION
AGENDA ITEM REQUEST FORM

MEETING DATE: October 6, 2020

AGENDA PLACEMENT:

☐ **PUBLIC HEARING**
☐ **UNFINISHED BUSINESS**
☒ **INDIVIDUAL**

CAPTION:

Discussion of and action on a request by PR Custom Signs for approval of a wall sign, pursuant to Municipal Code of Ordinances Chapter 98 *Zoning*, Section 98-72 *Old Town Helotes Special District*, Subparagraph (g)(6) (b)(2) *Commercial Signs – Projecting, Wall, Hanging, or In / On Windows* for Texas Property Group located at 14893 Bandera Road, Suite 5B, Helotes, Texas 78023, more particularly described as BCAD Prop. ID No. 242125. (Recommendation Item; Applicant)

EXECUTIVE SUMMARY:

Texas Property Group, a full service real estate brokerage, is a new tenant in the office building located at 14893 Bandera Road. The building is situated in the Old Town Helotes zoning district and located near the intersection of Bandera Road and Scenic Loop Road.

The applicant has submitted a sign permit application for their new office space. The sign specifications are:

- Sign Type: Wall Mount
- Sign Text: Texas Property Group Ranch Sales
- Sign Area: 13 square feet (2.5 feet height x 5.2 feet length); Not to exceed 32 s.f.
- Quantity: One wall sign
- Design: Black background, white State of Texas outline, and red/white text
- Lighting: Internally illuminated by LED lighting
- Code: Complies with Section 98-72 *Old Town Helotes Special District*, Subparagraph (g)(6) (b)(2) *Commercial Signs – Projecting, Wall, Hanging, or In/On Windows*

ATTACHMENTS:

Attachment A – Letter of Authorization
Attachment B – Location Map
Attachment C – Sign Permit Application

PREPARED BY: Ernest Cruz, Development Services Director

DATE SUBMITTED: September 23, 2020

Attachment A

NUS Rental, Inc.
14893 Bandera Rd., Suite #8
Helotes, TX 7823
Sept 21, 2020

Texas Property Group
14893 Bandera Rd., Suite #5C
Helotes, TX 78023

Dear Kara Gilbert,

I have reviewed the proposed business sign plans and picture, and hereby give my written approval to affix this sign to the outside of the office building.

Sincerely,

Leanne Marquez
Property Manager

Attachment B

Property Identification #: 242125

Geo ID:	04524-000-0450
Situs Address:	14893 BANDERA RD HELOTES, TX 78023
Property Type:	Real
State Code:	F1

Property Information: 2021

Legal Description:	CB 4524 P-45 ABS: 645
Abstract:	A04524
Neighborhood:	NBHD code51310
Appraised Value:	N/A
Jurisdictions:	08, 06, 11, 09, CAD, 56, 10, 42

Owner Identification #: 3065133

Name:	NUS RENTAL INC
Exemptions:	
DBA:	NUS RENTAL INC

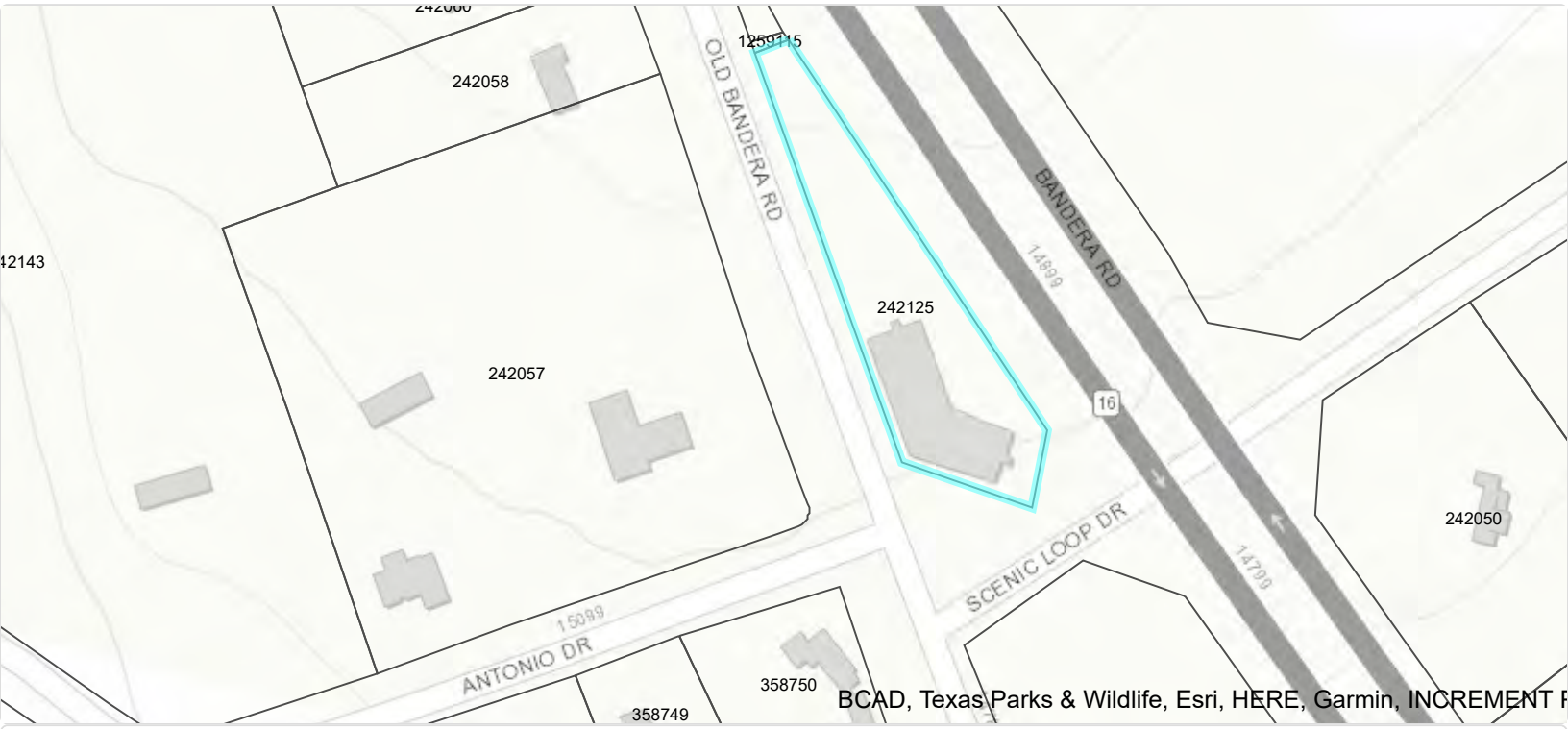

Bexar CAD Map Search

This product is for informational purposes only and may not have been prepared for or be suitable for legal, engineering, or surveying purposes. It does not represent an on-the-ground survey and represents only the approximate relative location of property boundaries. The Bexar County Appraisal District expressly disclaims any and all liability in connection herewith.

Attachment B

Google Maps

Imagery ©2020 Google, Imagery ©2020 CAPCOG, Maxar Technologies, Map data ©2020 50 ft

Subject: FW: New Form Submission: Sign Permit

From: City of Helotes <info@helotes-tx.gov>
Sent: Wednesday, September 16, 2020 9:42 AM
To: Ernest Cruz <ECruz@Helotes-TX.gov>; Belenda Parker <BParker@Helotes-TX.gov>; Nicole Mayfield <nmayfield@Helotes-TX.gov>
Subject: New Form Submission: Sign Permit

Someone submitted the Sign Permit form: Date: 09/16/2020 09:41 AM

1. Date: : 16/09/2020

2. Applicant Name: : Texas Property Group

3. Applicant Phone No.: : 2106161050

4. Applicant Email: : kara.gilbert.tx@gmail.com

5. Sign Location Address: : Address: 14893 Bandera Road Suite 5B
Address 2:
City: Helotes
State: Texas
Zip: 78023
Country: United States

6. Business Use: : Office Space.

7. No. of Businesses: : 1

8. Current Zoning: : 1

9. Property Owner Name (if different from applicant): : Dan Cox

10. Property Owner's Address (if different from applicant): :
Address: Address 2:
City:
State:
Zip:
Country: United States

11. Master Sign License Holder Name: : Pedro Ramos

12. Master Sign Contractor's License No.: : 18990

13. Master Sign Contractor's Phone No.: : 2107815393

14. Master Sign Contractor's Email: : PRCUTOMSIGNS@gmail.com

15. Sign Company Name : PR CUSTOM SIGNS

16. Sign Company Business Address: : Address: 10869 Hillpoint
Address 2:
City: San Antonio
State: Texas
Zip: 78217
Country: United States

17. Sign Type: : Wall Mount

18. Linear Feet of Applicable Building or Lease Space Frontage: : 13'

19. Sign Dimensions: : 62" x 30.5"

20. Sign Square Footage: : 13

21. Sign Height: : 2.5'

22. Sign Colors: : Black, white and red

23. Sign Text: : Texas Property Group Ranch Sales

24. Sign Lighting: : Iluminated

25. If illuminated, indicate type of lighting: : White LED's.

26. Signage Plans: : https://www.helotes-tx.gov/assets/uploads/general/1600267305_texas_property_group_render.pdf

27. Signage Color Sketches and Photographs: : https://www.helotes-tx.gov/assets/uploads/general/1600267305_texas_property_group_render.pdf

28. Signage Site Plan: : https://www.helotes-tx.gov/assets/uploads/general/1600267305_texas_property_group_render.pdf

29. Property Owner's Consent: : https://www.helotes-tx.gov/assets/uploads/general/1600267305_texas_property_group_owner_approval..jpg

30. Applicant Signature : Pedro Ramos

Front lit plex face channel letters w/ wireway mounted

Attachment C

QUANTITY:	**ONE**
Overall Height:	**2.5'**
Overall Length:	**5.2'**
Total Sq.Ft.:	**13 SqFt**
Returns:	**Black**
Backs:	**White**
Trimcap:	**Black**
Face:	**White and red acrylic**
First-surface translucent vinyl:	**Black**
Backer Panel:	**Black**
Wireway:	**Black**
Illumination:	**White Led's**

NOTES:

- WHITE interiors for increased illumination
- All paint two-stage automotive acrylic

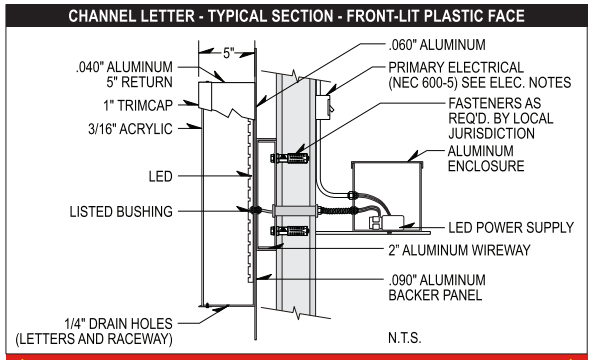

ELECTRICAL NOTES

Sign Company DOES NOT provide primary electrical to sign.
Power to the sign must be done by a licensed electrical contractor or licensed electrician.
Each sign must have:
1. A minimum of one dedicated 120V 20A circuit
2. Junction box installed within 6 feet of sign
3. Three wires: Line, Ground, Neutral

Client Name: **Texas Property Group**

Location:

Attachment C

PLANNING & ZONING COMMISSION
AGENDA ITEM REQUEST FORM

MEETING DATE: October 6, 2020

AGENDA PLACEMENT:

☐ **PUBLIC HEARING**
☐ **UNFINISHED BUSINESS**
☒ **INDIVIDUAL**

CAPTION:

Discussion of and action on a request by Southwest Texas Sign Service, Inc. for approval of signage for O'Reilly Auto Parts located at 13523 Bandera Road, Helotes, Texas, 78023, more particularly described as BCAD Prop. ID No. 1273575, and including the following:

a. Secondary Wall Sign, pursuant to Municipal Code of Ordinances Chapter 66 *Signs*, Section 66-51 *Commercial Signs:* Subparagraph (b) *Wall Signs*; and

b. Secondary Monument Sign, pursuant to Municipal Code of Ordinances Chapter 66 Signs, Section 66-49 *Commercial Signs: Single-Business Use Monument Type* (Recommendation Item; Applicant)

BACKGROUND:

On September 5, 2017, the Planning and Zoning Commission approved the conceptual design plan for O'Reilly Auto Parts Store, including signage. On August 22, 2019, signage permits were issued for the store. The existing signage is as follows:

- Existing Wall Sign – 69.29 square feet
  - Located on the front of the building, facing Bandera Road
- Existing Monument Sign – 75 square feet
  - Located at the front of the property, facing Bandera Road

EXECUTIVE SUMMARY:

The subject property is located between Bandera Road and Riggs Road, just North of Bobby J's Hamburgers. The applicant is requesting a secondary wall sign on the building's north elevation, going southbound on Bandera Road, and a secondary monument sign behind the store, parallel to Riggs Road. The applicant asserts that the downward slope of the property hinders building visibility and believes that signage will help customers identify the store.

The specifications for the additional signage are:

- **Item No. 6 A**
  Secondary Wall Sign
  - Size: 30 square feet (69.29 s.f. existing + 30 s.f. secondary = 99.29 s.f.); Not to exceed 100 square feet
  - Quantity: Max of two signs; One sign per street or pedestrian way which the building faces or abuts
  - Location: Right side of building for visibility when driving South on Bandera Road
  - Design: Red, white, green, and black national branding colors
  - Lighting: Background will be opaque – Text internally illuminated
  - Code: Complies with Section 66-51 *Commercial Signs:* Subparagraph (b) *Wall Signs*

- **Item No. 6 B**
  Secondary Monument Sign
  - Size: 84 square feet; Not to exceed 84 square feet
  - Height 7 feet; Not to exceed 8 feet
  - Quantity: One sign for each street frontage on which the building abuts
  - Location: Behind the store, on the Riggs Road side entrance
  - Design: Red, white, green, and black national branding colors
  - Lighting: Internally illuminated
  - Landscaping: Minimum of 2 feet landscaping around the base as depicted in planting schedule
  - Code: Complies with Section 66-49 *Commercial Signs: Single-Business Use Monument Type*

ATTACHMENTS:

Attachment A – Letter of Intent / Authorization
Attachment B – Location Maps
Attachment C – Wall Sign Permit Application (secondary wall sign)
Attachment D – Monument Sign Permit Application (secondary monument sign)
Attachment E – Existing Signage

PREPARED BY: Ernest Cruz, Development Services Director

DATE SUBMITTED: September 24, 2020

Attachment A

August 13, 2020

To: Ernest Cruz

City of Helotes

O'Reilly respectfully requests and proposes additional signage due to the downward slope of the property causing the store to not be very visible until motorist are past the drive entrance.

We have also become very aware of the amount of traffic on Riggs Rd behind the store and propose the monument structure will aide in helping customers looking for our store.

Please let us know if you need additional information.

Kindest regard,

Claudia Letterman
Project Administrator
O'Reilly Automotive Stores, Inc

Attachment A

O'Reilly AUTO PARTS
PROFESSIONAL PARTS PEOPLE

P.O. Box 1156 233 S. Patterson
Springfield, MO 65801
Phone (417)-862-3333
www.oreillyauto.com

August 13th 2020

RE: Letter of Authorization

TO: Applicable Governing Authority

The purpose of this letter is to notify you that I am allowing Southwest Texas Sign Service to sign and notarize the Sign Permit Application for the signs at the O'Reilly store located at 13523 Bandera Rd Helotes TX 78023 on my behalf.

Regards,

Sara Lucas

Sara Lucas
Real Estate Development Administration and Services Manager
233 S Patterson Ave
Springfield MO 65802

Attachment B

Property Identification #: 1273575

Geo ID:	04525-181-0010
Situs Address:	BANDERA RD HELOTES, TX 78023
Property Type:	Real
State Code:	F1

Property Information: 2021

Legal Description:	CB 4525 M (O'REILLY HELOTES SUB'D), BLOCK 1 LOT 1
Abstract:	9722/180
Neighborhood:	NBHD code51320
Appraised Value:	N/A
Jurisdictions:	08, 10, 11, CAD, 06, 09, 56, 42

Owner Identification #: 2890400

Name:	O'REILLY AUTO ENTERPRISES LLC
Exemptions:	
DBA:	O'REILLY AUTO PARTS(under construction)

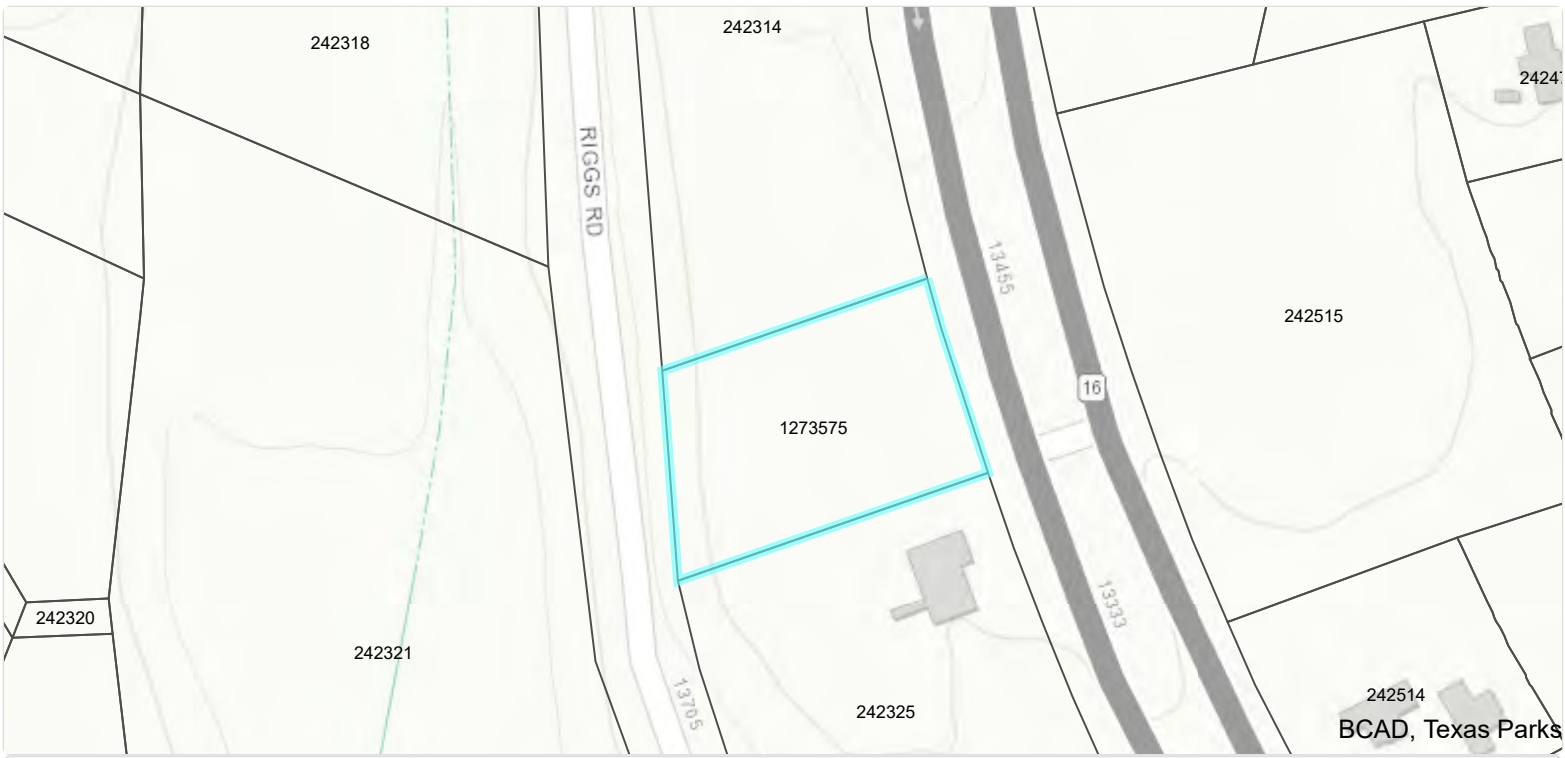

Bexar CAD Map Search

This product is for informational purposes only and may not have been prepared for or be suitable for legal, engineering, or surveying purposes. It does not represent an on-the-ground survey and represents only the approximate relative location of property boundaries. The Bexar County Appraisal District expressly disclaims any and all liability in connection herewith.

Attachment B

Google Maps

Imagery ©2020 Google, Map data ©2020 20 ft

City of Helotes
Development Services
Department
P.O. Box 507
12951 Bandera Road
Helotes, TX 78023
Phone (210) 695.8877
Fax (210) 695.2123

(ADDT'L WALL SIGN)

Attachment C

SIGN PERMIT APPLICATION

CHAPTER 66,

Sign Administrative Procedures

Name of Applicant: Mary Gorman Date: 09/17/2020

Sign Location Address: 13523 Bandera Rd.

Legal Description: Lot #: 1 Block #: 1 CB/NCB #: 4525

Use of Building: Commercial - Retail

No. of Businesses: _____ Zoning: B-3

Name of Property Owner: O'Reilly Auto Enterprises, LLC Phone #: (417) 862-2674

Property Owner's Address: 233 S. Patterson Springfield, MO 65802

Name of Sign Contractor: Southwest Texas Sign Service, Inc.

Contractor's License #: 12871 Phone #: (210) 648-1928

E-mail Address: mary@swtss.com

Contractor's Business Address: 7280 S. W.W. White Rd. San Antonio TX 78222

Type of Sign:
- ☐ Monument, Multi-Tenant
- ☑ Wall Mount
- ☐ Window
- ☐ Residential Entry
- ☐ Monument, Single Business
- ☐ Hanging
- ☐ Public/ Non-Profit Signage
- ☐ Traffic Control
- ☐ Projecting
- ☐ Miscellaneous Signage
- ☐ Other _____

Linear Feet of Building or Lease Space Frontage: (Right Side Elevation) 84.48 Linear Feet

Sign Dimensions: 3'-0" x 10'-0" Square Footage: 30 SF Height: 13'-10" Sign Colors: Green, White & Black

Sign Text: O'Reilly Auto Parts

Non-Illuminated Sign: ☐ Illuminated Sign: ☑ Type of Lighting: LED

Applicant must attach the following documents:

- Thirteen (13) sets of plans indicating sign size, color, type of material, and its parts; message size and style of lettering; type of lighting; method of attachment; associated landscaping.
- Thirteen (13) sets of color sketches, color photographs, or similar scaled presentation of the sign and building that shows how each would appear in relation to the other.
- Site plan showing location of proposed sign and copy of plat, if available, to determine easement locations.
- Written consent from the property owner.

Applicant's Signature: [signature] Date: 09/17/2020

Printed Name: Mary Gorman Phone #: _____

Applicant's Address: 7280 S. W.W. White Rd. San Antonio, TX 78222

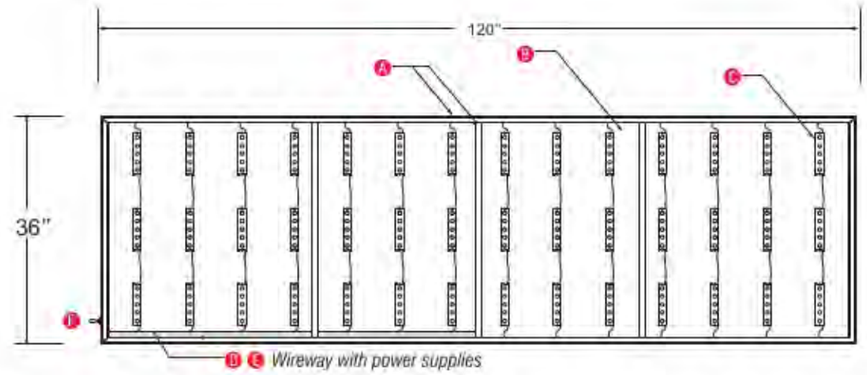

② Layout
Scale: 1/2" = 1'-0"

- **A** 9" deep extruded cabinet with 1"square tube support structure and 2 1/4"retainers.
- **B** .040 pre-painted Polar White aluminum backer panel.
- **C** GE-Tetra PowerStrip SS White LED's, **Part #GESS71-1 (7100**k) 5 LED's per module (single sided modules). Modules on 10" centers. 42 total modules.
- **D** GE-Tetra Power Supplies. **Part #GEPS12-60U-NA 12 Volt 50/60HZ** Load capacity: 14 modules per power supply. Total of three (3) per display.
- **E** Fabricated aluminum internal power supply wireway.
- **F** Disconnect with internal junction box.

Manufacture and supply one (1) new single face LED illum. cabinet with formed and embossed face.

- **A** Face is formed out of lexan with 2" draw. "O'Reilly" graphics are double embossed, "Auto Parts" copy is single embossed with painted graphics on 2nd surface. Graphics to match PMS 200c Red, PMS 342c Green, Black and White.
- **B** Single face extruded cabinet with 2 1/4"retainers. Vertical GE (GESS71-1) Tetra Power strip White LED illumination. Paint cabinet to: **Gloss Black**

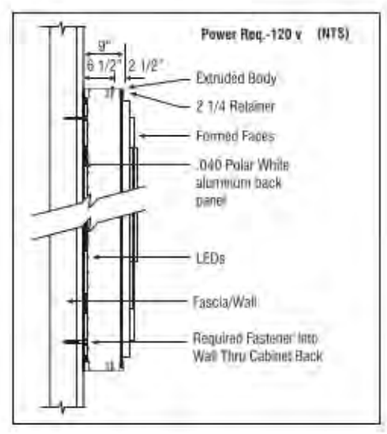

O'Reilly AUTO PARTS

O'Reilly Auto Parts
233 Patterson St.
Springfield, MO 65803

This original artwork is protected under Federal Copyright Laws. Make no reproduction of this design concept without permission.

Property of O'Reilly Automotive Inc.

Colors on print may not accurately depict specific colors.

36 x 120
ORAP s/f
LED
cabinet

Attachment C

Not to Scale

Project Name:	O’Reilly Auto Parts # 5956 Helotes TX	Date:	09/23/20	Salesperson:	Claudia Letterman	Customer Signature:	
Address:	13523 Bandera RD, Helotes TX 78023	Scale:	1"=99.52’	Artist:	MGM		

PROUDLY AFFILIATED WITH:

This design is the sole property of Payne Sign Company. It is not to be copied or reproduced in whole or in part without express written permission of the owner. If artwork is used or constructed by others Payne Sign Company shall be duly paid for designs and artwork.

Attachment C

Not to Scale

Project Name:	O'Reilly Auto Parts # 5956 Helotes TX	Date:	09/23/20	Salesperson:	Claudia Letterman	Customer Signature:
Address:	13523 Bandera RD, Helotes TX 78023	Scale:	1"=99.52'	Artist:	MGM	

PROUDLY AFFILIATED WITH:

TRI-STATE SIGN ASSOCIATION · UNDERWRITERS LABORATORIES ELECTRIC SIGN · I.B.E.W. LOCAL 453 · INTERNATIONAL SIGN ASSOCIATION · WSA WORLD SIGN ASSOCIATES

This design is the sole property of Payne Sign Company. It is not to be copied or reproduced in whole or in part without express written permission of the owner. If artwork is used or constructed by others Payne Sign Company shall be duly paid for designs and artwork.

City of Helotes
Development Services
Department
P.O. Box 507
12951 Bandera Road
Helotes, TX 78023
Phone (210) 695.8877
Fax (210) 695.2123

(ADDT'L MONUMENT SIGN)

SIGN PERMIT APPLICATION

Attachment D

CHAPTER 66,

Sign Administrative Procedures

Name of Applicant: Mary Gorman Date: 09/17/2020

Sign Location Address: 13523 Bandera Rd.

Legal Description: Lot #: 1 Block #: 1 CB/NCB #: 4525

Use of Building: Commercial - Retail

No. of Businesses: 1 Zoning: B-3

Name of Property Owner: O'Reilly Auto Enterprises, LLC Phone #: (417) 862-2674

Property Owner's Address: 233 S. Patterson Springfield, MO 65802

Name of Sign Contractor: Southwest Texas Sign Service, Inc.

Contractor's License #: 12871 Phone #: (210) 648-1928

E-mail Address: mary@swtss.com

Contractor's Business Address: 7280 S. W.W. White Rd. San Antonio TX 78222

Type of Sign:
- ☐ Monument, Multi-Tenant
- ☐ Wall Mount
- ☐ Window
- ☐ Residential Entry
- ☑ Monument, Single Business
- ☐ Hanging
- ☐ Public/ Non-Profit Signage
- ☐ Traffic Control
- ☐ Projecting
- ☐ Miscellaneous Signage
- ☐ Other

Linear Feet of Building or Lease Space Frontage: N/A (Proposed sign to be placed on the Riggs Road Side)

Sign Dimensions: 7'-0" x 12'-0" Square Footage: 84SF Height: 7'-0" Sign Colors: Red, Green, Black & white.

Sign Text: O'Reilly Auto Parts

Non-Illuminated Sign: ☐ Illuminated Sign: ☑ Type of Lighting: LED

Applicant must attach the following documents:

- Thirteen (13) sets of plans indicating sign size, color, type of material, and its parts; message size and style of lettering; type of lighting; method of attachment; associated landscaping.
- Thirteen (13) sets of color sketches, color photographs, or similar scaled presentation of the sign and building that shows how each would appear in relation to the other.
- Site plan showing location of proposed sign and copy of plat, if available, to determine easement locations.
- Written consent from the property owner.

Applicant's Signature: Date: 09/17/2020

Printed Name: Mary Gorman Phone #: (210) 648-1928

Applicant's Address: 7280 S. W.W. White Rd. San Antonio TX 78222

Attachment D
Behind store, on Riggs Road side

Attachment D

O'Reilly AUTO PARTS

Helotes, TX
#5956
(Sub)

TUBE ART GROUP

Yakima Office
2323 W. Washington Ave
Yakima, WA 98902
509.469.8186
800.562.2854
Fax 509.469.8211

This original artwork is protected under Federal Copyright Laws. Make no reproduction of this design concept without permission from Tube Art Group.

0080
Customer Number

139141
Quote Number

OAP5956-HelotesTX-141
File Name

Paul Genge
Salesperson

Todd Hamilton
Drawn By

**
Checked By

September 16, 2020 **1.0**
Date

Revisions

[ ] Approved
[ ] Approved With Changes Noted

Customer Signature

Date

Landlord Signature

Date

Helotes, TX
#5956

Colors on print may not accurately depict specific colors.

Attachment D

*Monument base by-others

① Monument Sign
Scale: 3/8" = 1'-0"

Part# 4_12-MonumentCabinet-PE-DF
48.00 sq.ft.

Manufacture and supply one (1) new d/f illum. monument cabinet with formed and embossed faces.

Ⓐ Faces are formed out of lexan with 2" draw. "O'Reilly" graphics are double embossed, "Auto Parts" copy is single embossed with painted graphics on 2nd surface. Graphics to match PMS 200c Red, PMS 342c Green, Black and White.

Ⓑ
Vertical GE (GEDS71-2) White DS LED illumination . Paint cabinet to: **Gloss Black**. Internal pipe/cabinet exposure calculation: **C80**
24" deep fabricated cabinet with 2 1/4" (removable-non hinged) retainers. Cabinet internally set up to receive 4" Sch. 40 steel pipe (pipe by others).

Standard Monument Sign Cabinet
4'-0" x 12'-0" Display
4_12-MonumentCabinet-PE-DF
48.00 sq.ft.

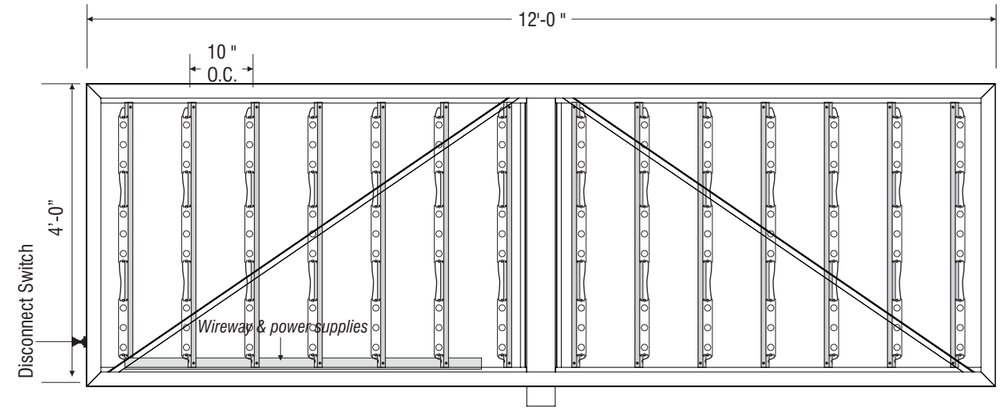

② Layout
Scale: 1/2" = 1'-0"

Ⓐ 24" deep fabricated cabinet with support structure and 2 1/4" retainers.

Ⓑ 4" Sch. 40 steel pipe (**provided by others**), shown for reference only.

Ⓒ GE-Tetra PowerStrip DS White LED's. **Part #GEDS71-2 (7100**k) 14 LED's per module (7 LED's per side) on GE-Tetra Mounting Rails. **Part #GEDSRL08**. Rails on 10" centers. 42 total modules.

Ⓓ GE-Tetra Power Supplies. **Part #GEPS24-100U NA 24 Volt 120-277VAC 50/60HZ**
Load capacity: 16 modules per power supply. Total of two (3) per display.

Ⓔ Fabricated aluminum internal power supply wireway.

Ⓕ Disconnect Switch

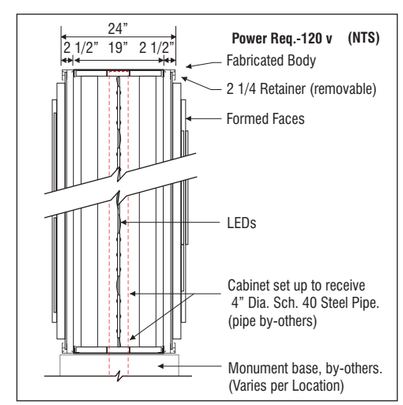

TAG
TUBE ART GROUP

Yakima Office
2323 W. Washington Ave
Yakima, WA 98902
509.469.8186
800.562.2854
Fax 509.469.8211

This original artwork is protected under Federal Copyright Laws. Make no reproduction of this design concept without permission from Tube Art Group.

0080
Customer Number

139141
Quote Number

OAP5956-HelotesTX-141
File Name

Paul Genge
Salesperson

Todd Hamilton
Drawn By

**
Checked By

September 16, 2020 1.0
Date

Revisions

[ ] Approved
[ ] Approved With Changes Noted

Customer Signature

Date

Landlord Signature

Date

O'Reilly

Helotes, TX
#5956

Colors on print may not accurately depict specific colors.

Attachment D

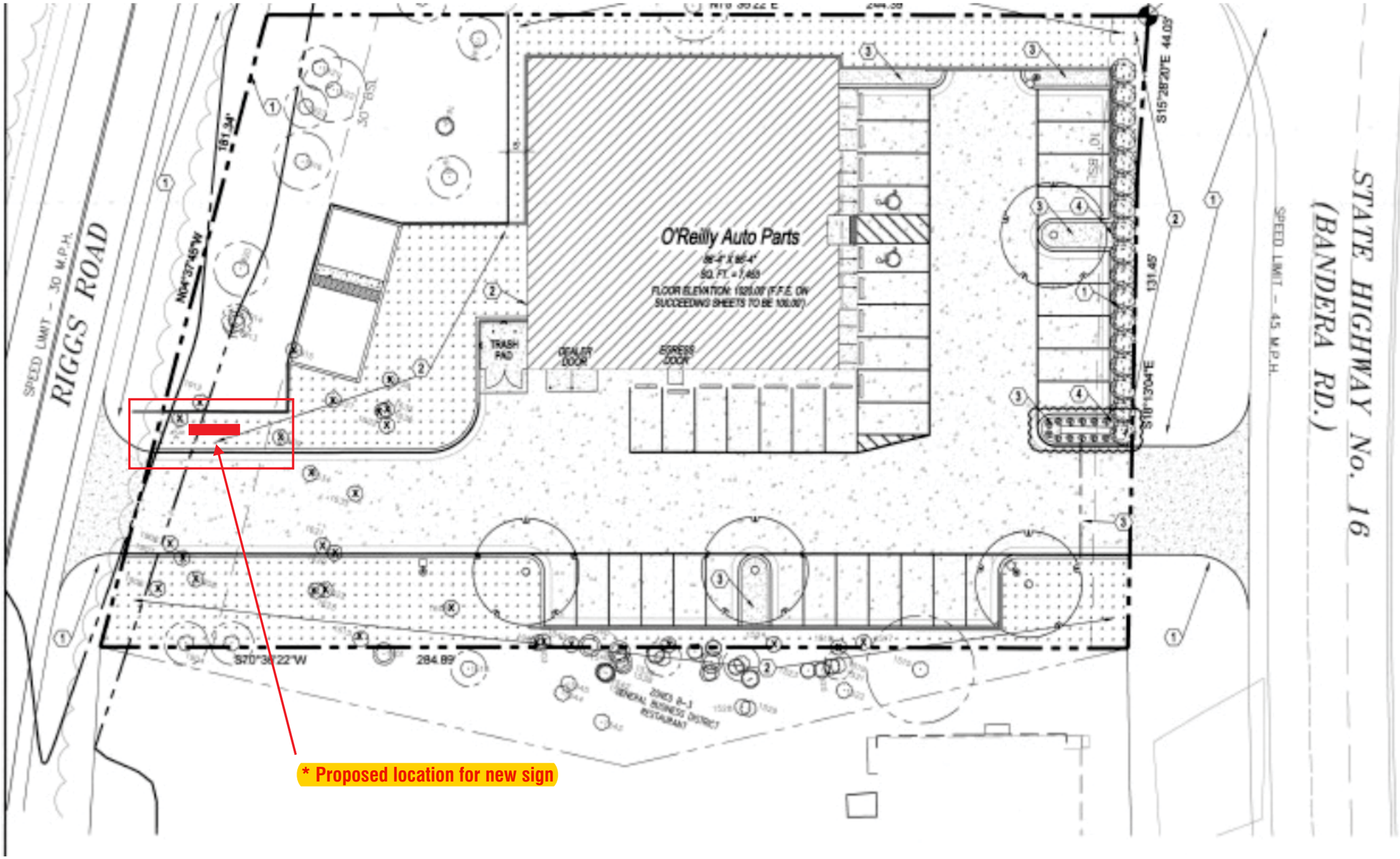

① Site Plan
Scale: NTS

Site Plan- Proposed location for new sign

TUBE ART GROUP

Yakima Office
2323 W. Washington Ave
Yakima, WA 98902
509.469.8186
800.562.2854
Fax 509.469.8211

This original artwork is protected under Federal Copyright Laws. Make no reproduction of this design concept without permission from Tube Art Group.

0080
Customer Number

139141
Quote Number

OAP5956-HelotesTX-141
File Name

Paul Genge
Salesperson

Todd Hamilton
Drawn By

**
Checked By

September 16, 2020 1.0
Date

Revisions

[ ] Approved
[ ] Approved With Changes Noted

Customer Signature

Date

Landlord Signature

Date

Helotes, TX
#5956

Colors on print may not accurately depict specific colors.

Attachment D

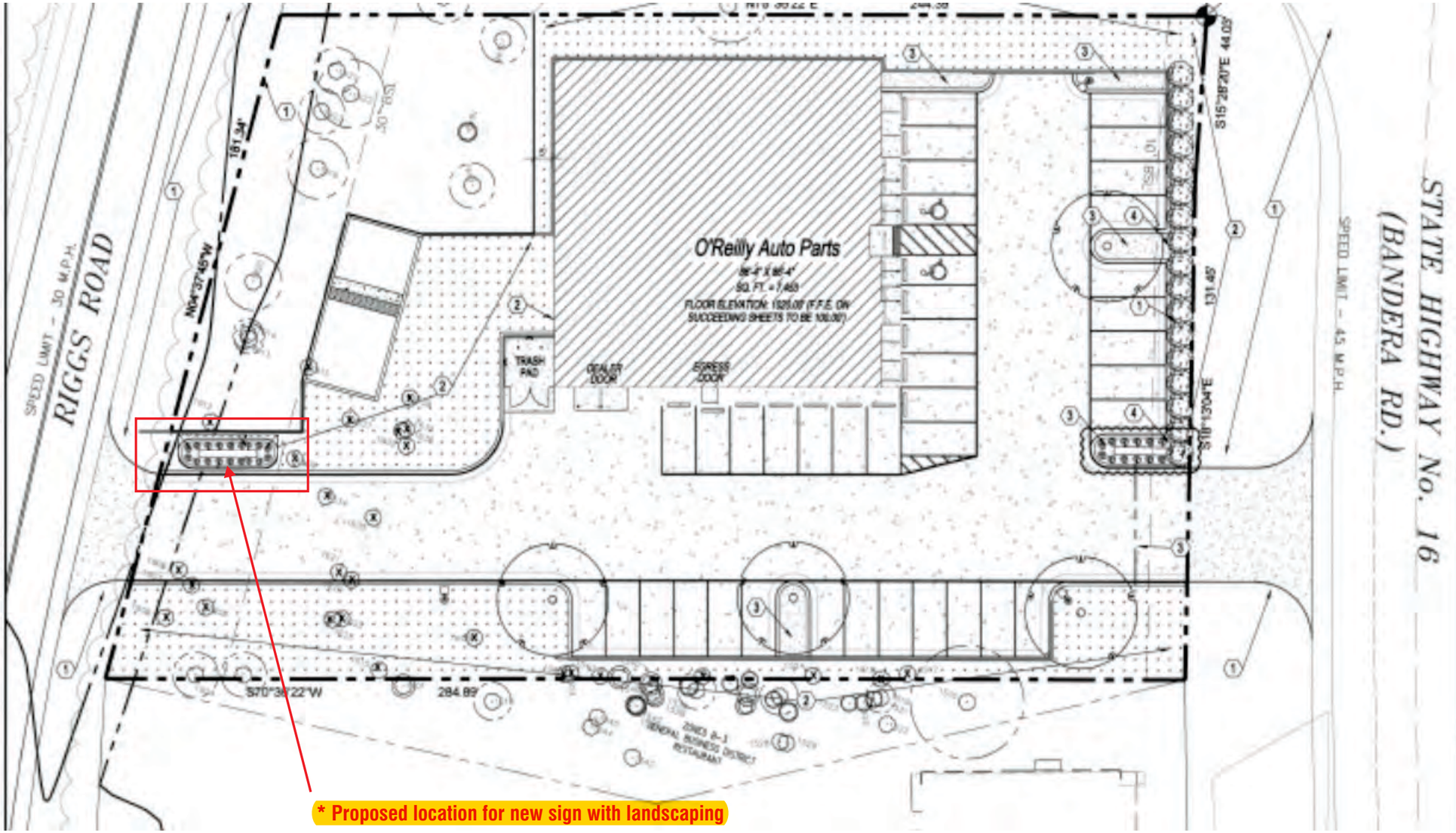

1 Site Plan
Scale: NTS

Landscape Plan- Proposed location for new sign with landscaping.

PLANTING SCHEDULE

ALL PLANTINGS MAY BE SUBSTITUTED DUE TO REGION OR LOCAL REQUIREMENTS IF NECESSARY

MARK	COMMON NAME	BOTANICAL NAME	QUANTITY	SIZE	DETAIL	NOTES
	TEXAS SAGE	LEUCOPHYLLUM FRUTESCENS	17	2' HEIGHT MIN. AT PLANTING AND PLANTED IN A DENSITY OF 1 EVERY 20 SQ.FT.	4/L1.2	FULL PLANT
	WINECUP	CALLIRHOE INVOLUCRATA	12	1 QUART CONTAINER PLANTED IN A PATTERN AS SHOWN.	4/L1.2	FULL PLANT

TAG
TUBE ART GROUP

Yakima Office
2323 W. Washington Ave
Yakima, WA 98902
509.469.8186
800.562.2854
Fax 509.469.8211

This original artwork is protected under Federal Copyright Laws. Make no reproduction of this design concept without permission from Tube Art Group.

0080
Customer Number

139141
Quote Number

OAP5956-HelotesTX-141
File Name

Paul Genge
Salesperson

Todd Hamilton
Drawn By

**
Checked By

September 16, 2020 1.0
Date

Revisions

[ ] Approved
[ ] Approved With Changes Noted

Customer Signature

Date

Landlord Signature

Date

O'Reilly

Helotes, TX
#5956

Colors on print may not accurately depict specific colors.

Motion was made by Commissioner Wade, second by Commissioner Hozza to nominate Jason Wightman as Vice-Chairman.

Motion to approve carried unanimously.

Motion was made by Chair Michel, second by Commissioner Hawk, to elect Ron Hozza as Secretary.

Motion to approve carried unanimously.

5. Discussion of and action on the minutes of the Regular Meeting of the Planning and Zoning Commission dated August 1, 2017. (Approval Item; Staff)

Motion was made by Commissioner Wightman, second by Commissioner Rios, to approve the minutes as submitted.

Motion to approve carried unanimously.

6. Discussion of and action on a preliminary and final plat establishing the O'Reilly Helotes Subdivision, Lot 1, Block 1, being a Subdivision of 1.0621 acres of land in the Comanche Creek Irrigation Company Survey, Section No. 355, Abstract No. 172, in the City of Helotes, Bexar County, Texas. (Approval Item; Applicant)

Motion was made by Commissioner Wade, second by Commissioner Hozza, to approve the item as written.

Motion to approve carried unanimously.

7. Discussion of and action on a request by Esterly Schneider & Associates for approval of a Conceptual Design Plan for an O'Reilly Auto Parts Store on a 1.0621 acre tract of land located, generally, near the intersection of S.H. 16 (Bandera Rd.) and F.M. 1560, more particularly described as BCAD Property ID No. 1254192 and CB 4525 P-9F, including, but not limited to, the following:

- **Site plan;**
- **Building design;**
- **Exterior lighting; and**
- **Signage. (Approval Item; Applicant)**

Motion was made by Commissioner Wade, second by Commissioner Hawk, to approve the Conceptual Design Plan for an O'Reilly Auto Parts Store, on the condition that the proposed monument sign be limited to 84 square feet, that the base be solid, and not a pole, and that landscaping be maintained around the site.

Motion to approve carried unanimously.

Attachment E
Existing - Daytime

Attachment E
Existing - Nighttime